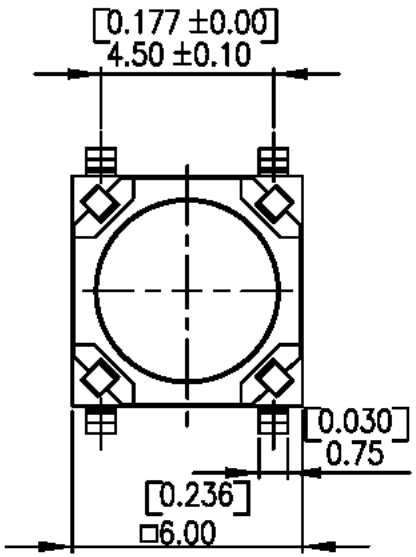

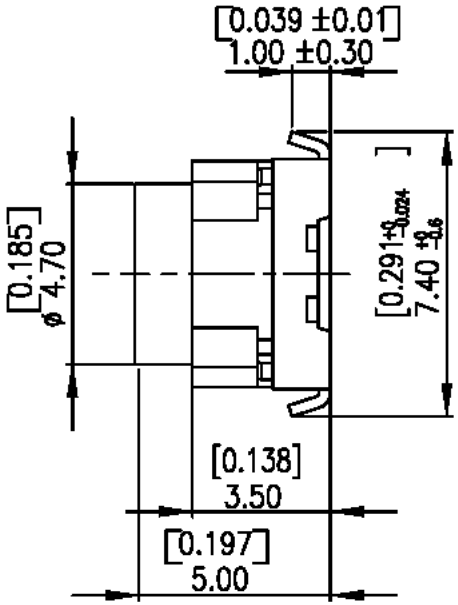

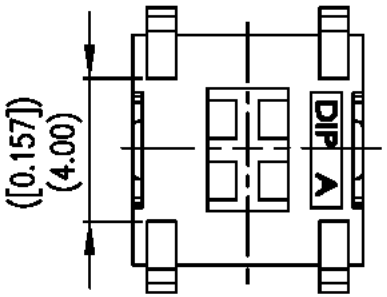

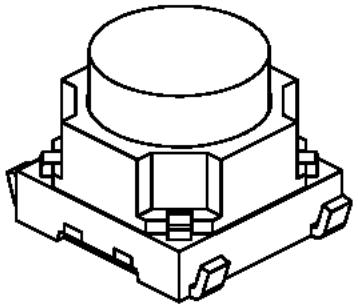

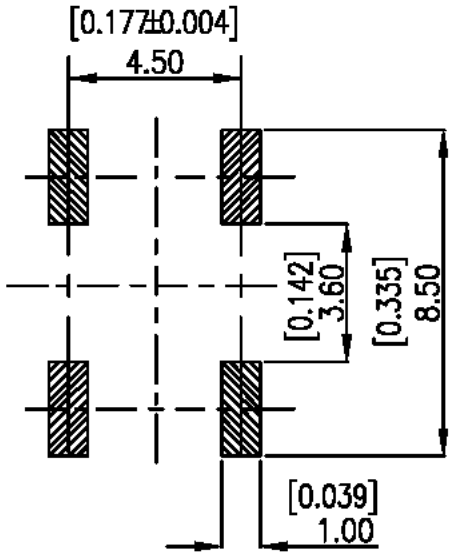

P.C.B. LAYOUT

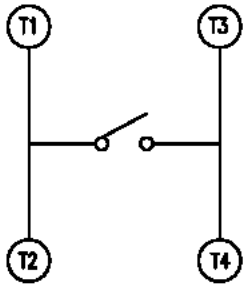

CIRCUIT DIAGRAM

NOTE:
1.ALL DIMENSIONS ARE IN MILLIMETER,BRACKETED DIMENSIONS ARE IN INCHES.
2.GENANAL TOLERANCES ±0.20mm.

ZONE	REV.	DESCRIPTION	DATE	APPD.
	A	DWG.REL		

APPD:	QTY:	HUAI YANG CO.,LTD.	PART NAME: Long Travel SMT Tactile Switch
CHKD:	SCALE: 7:1		
DR: 張文逸	REV: A / UNITS: mm	PART NO: LTL-6 / MAT'L:	DWG NO: RD6PL
DESIGN: 張文逸		FINISH:	